Via E. Fermi - ZI Ramera
31010 - Mareno di Piave (TV) - ITALIA
Tel. 0438492502
Fax 0438492545
www.gridiron.it - info@gridiron.it

TECHNICAL SHEET

ASSEMBLED CODE	4D1BSG2
DESCRIPTION	ABS channel MOD. PLASTIC FLY 150 LOW, with ABS protective edge rails, c/w S235JR pressure-locked grating, 25x2-10x2, 55x11 heelguard mesh, installed and locked, hot-dip galvanised. Channel average runoff section cm^2 106. Load class C250 according to EN 1433:2008 Norm, if installed following manufacturer instructions.
PRODUCT LINE	Drainage channel type "M"
STANDARD	EN 1433:2008
LOADING CLASS	C250 - EN 1433:2008
INTENDED USE OR USES OF THE PRODUCT	Collection and channelling of surface water into areas subject to pedestrian and/or vehicle traffic according to the indicated flow rate.
DURABILITY	NPD
QUANTITY PER PACK	55
1) CHANNEL	4D1BS
MATERIAL	ABS
SERIES TYPE	Plasticfly series 150
SECTION TYPE	Low
PROFILE TYPE	Without profiles
VERSION TYPE	Normal without built-in slope
WATER FLOW LT / SEC	0,5%=8,7 - 1%=12,3 - 1,5%=15,0 - 2%=17,4 - 3%=21,3
2) GRID	4D11G2
GRID TYPE	Press-locked
MATERIAL	Carbon Steel S235JR acc. to EN 10025-2:2019
SURFACE FINISH	Hot Dip Galvanizing - UNI 1461

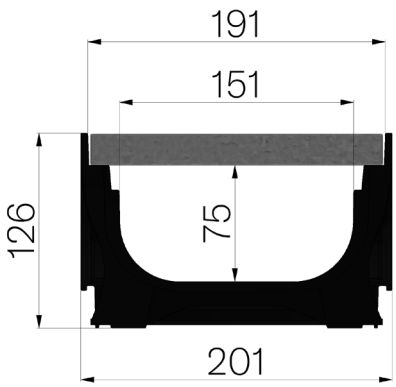

Article dimensions mm	Inner width mm	Runoff section cmq	Weight Kg/each
1000 x 201 x H 126	151	106	7,45