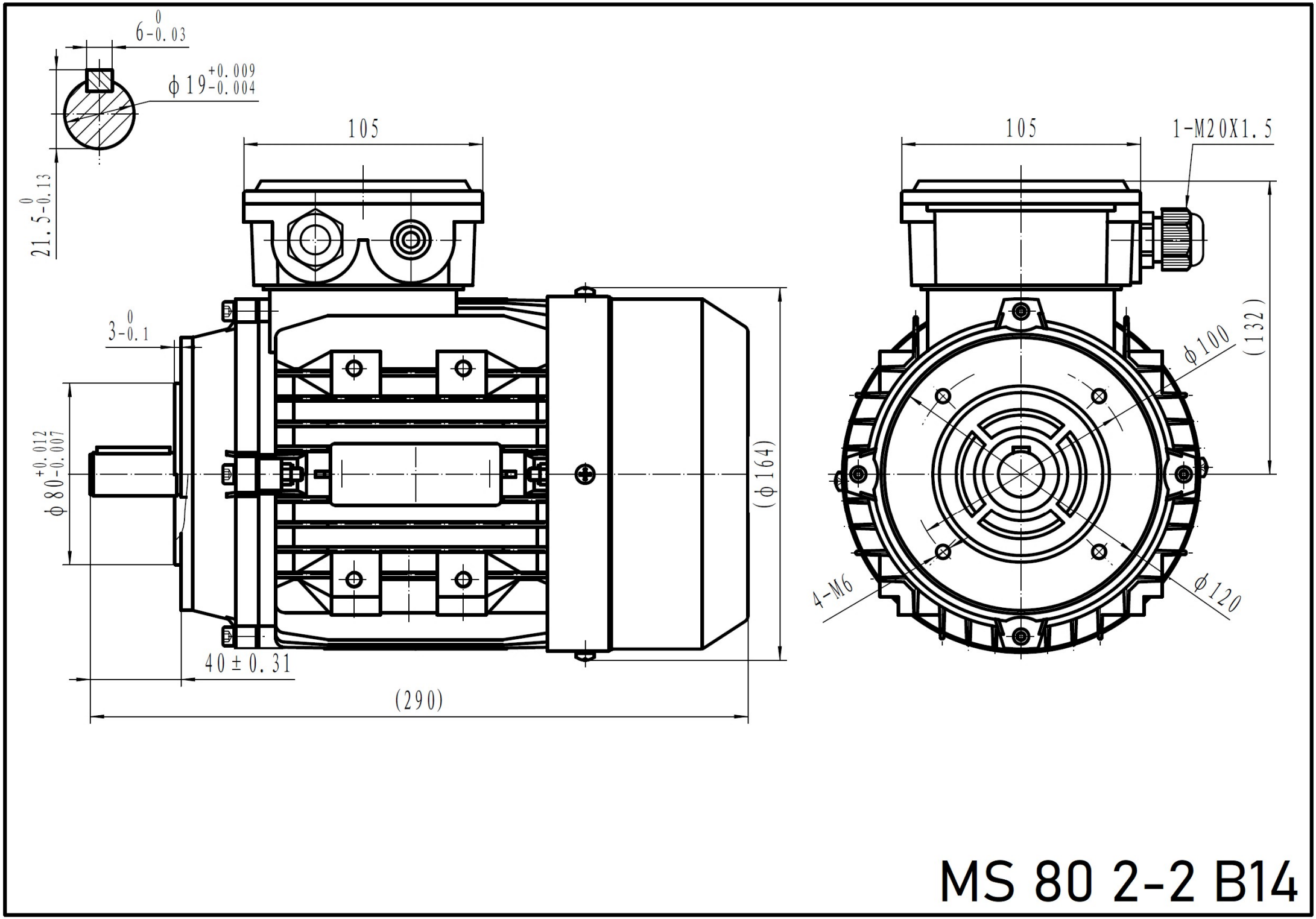
6-0.03 0
ϕ19 +0.009 -0.004
21.5 -0.13 0
105
3-0.1 0
ϕ80 +0.012 -0.007
(ϕ164)
40±0.31
(290)
105
1-M20X1.5
(132)
ϕ100
4-M6
ϕ120

MS 80 2-2 B14