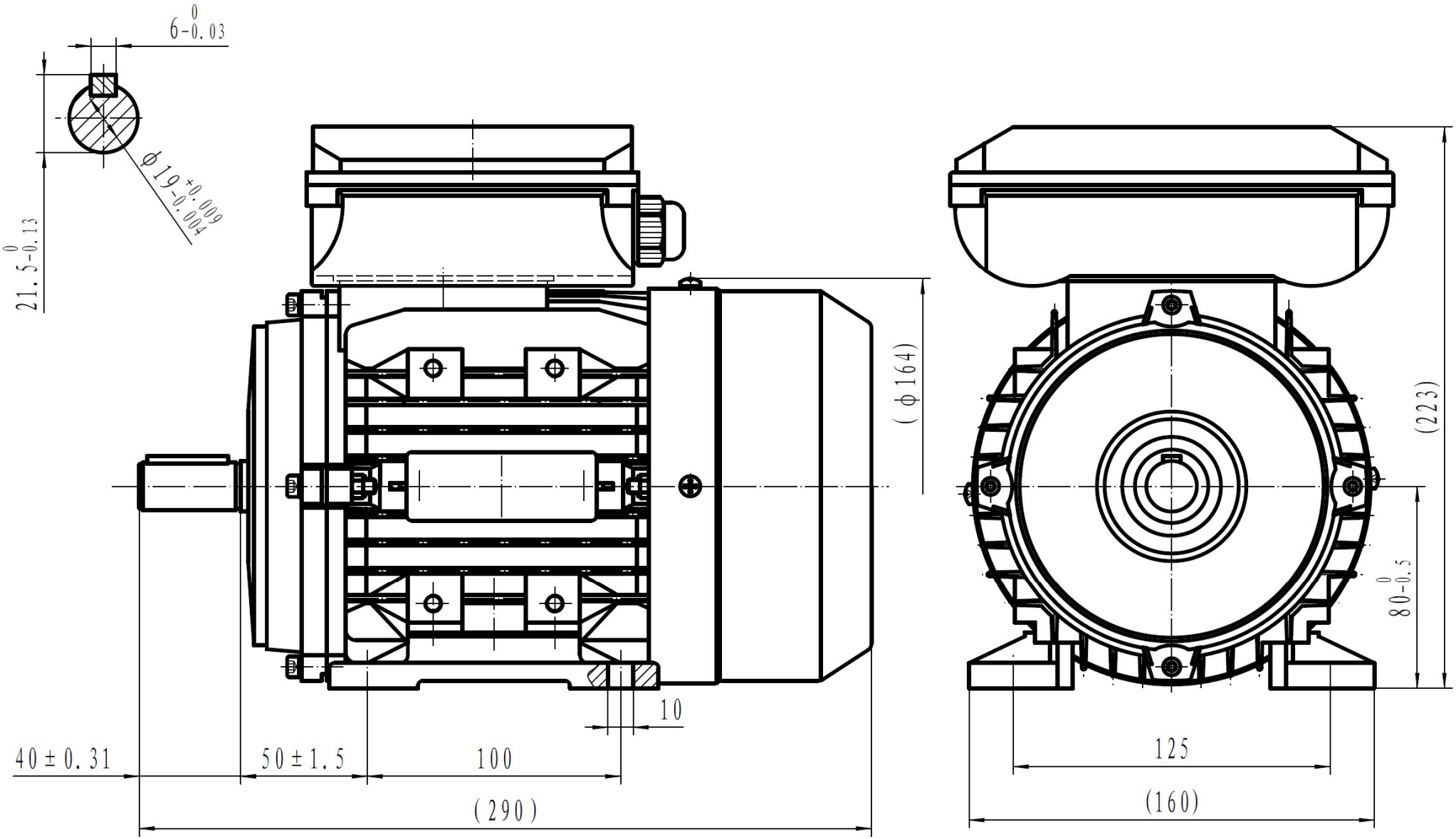
6 0 -0.03
Φ19 +0.009 -0.004
21.5 0 -0.13
(Φ164)
10
40 ± 0.31
50 ± 1.5
100
(290)
(223)
80 0 -0.5
125
(160)

ML 80 1-2 B3