International Journal of Research and Development in Engineering Science
ISSN: 2582 - 4201(Online) , http://www.ijrdes.com/
Regular Issue, Vol. 4, Issue. 5 (September – October) , 2022 , Pages : 1 – 4
Received: 28 December 2021 ; *Accepted*: 23 September 2022 ; *Published*: 16 October 2022
https://doi.org/10.63328/IJRDES-V4RI5P1
Original Paper : Mixed Research – Experimental Research Paper

Harmonic Reduction in the Power System by DSTATCOM with Artificial Neural Network Controller

Kuppireddy Krishna Reddy

Department of Electrical and Electronics Engineering , Mother Theresa Institute of Engineering & Technology, Palamaner-517408, Chittoor District, Andhra Pradesh, India; krishnareddy206@mtieat.org

** Corresponding Author: K. Krishna Reddy ; krishnareddy206@mtieat.org*

Abstract: An important issue in power grid systems is the enhancement of harmonics. Managing the harmonics event and its major impacts on power quality is the focus of this research. It is presented and used as a distributed static synchronous compensator, where AI is used as a novel method of control (DSTATCOM). Reduce and/or attenuate harmonic amplification in power system networks with the help of DSTATCOM, a FACTS device that is capable of achieving very effective reactive power compensation. The MATLAB/Simulink software is used to run simulations and collect results.

Keywords: Distribution Static Synchronous Compensator (DSTATCOM), Neural Network, Harmonics, Power Quality.

1. Introduction

Because of outages, electricity experts are now quite worried about system stability. In a flexible alternating current transmission system (FACTS), a distributed synchronous condensers compensator (DSTATCOM) is a device that is shunt linked to the system. By injecting shunted present in tandem with the line voltage, the dynamic compensator (STATCOM) may electrically simulate the reactor and capacitor. Power system networks often use nonlinear loads. However, the resonant of L and PF placed in household capacitors and employed as power systems presents a significant challenge known as "harmonics."

The transmission and distribution portions of the power system utilize FACTS devices to dampen harmonic amplification [1, 2]. DSTATCOM has been shown to be a genuine FACTS device in power system networks, and it achieves its effects by injecting VAR into such networks. Reactive power and imbalanced loads in distribution systems may be mitigated at an affordable price with the help of DSTATCOM's bespoke power electronics, like the dynamic voltage restorative and UPQC conditioner. Consumers' happiness with their electrical energy infrastructure hinges on fixing the power quality problem. There will likely be more problems with control quality as the use of control devices and nonlinear loads proliferate. For this problem, FACTS has a strategic solution to provide. Speedy and trustworthy transmission parameter control innovations are required. Because of this, we set out to develop a web-based, learning-based controller for a power inverter in order to enhance its efficiency and reduce its THD output (THD). To better the performance of the controller of SAF, researchers have turned to ANN methods and traditional backpropagation algorithms [3-5]. However, there is no online adaptability in the currently used algorithms, and the algorithms' performance under various load situations has not been measured. Power system hardware is affected by transmission line flaws of any distance [6, 7]. Voltage problems and weakened client equipment are the result of flaws in transmission line networks and appropriation control frameworks [8]. This research resulted in the enhancement of the power framework efficiency of FACTS devices. These FACTS controllers may be utilized in normal and anticipated settings to maximize the corresponding capacity. STATCOM, UPQC, SVC, SSG, TCR, TSC, TSR, and SSSC are all variants of FACTS. In this research, we focused only on DSTATCOM. The amount of reactive power available at STATCOM's terminals is dependent on the reliability of the power supply. In the budgeting process, this STATCOM is referred to as electronic data exchange. Similar control methods have been implemented in the intensity feedback controller of generators to enhance the system frequency range and smooth the variations brought on by the widespread incorporation of wind, photovoltaics (PVs), and/or electric vehicles (EVs), as shown in the aforementioned studies [10–12]. However, few research has looked at the difficulties of using an ADP-based controller to regulate the current in a power electronic spwm modulator (PWM) [13].

2. Literature Survey

The damping of harmonic transmission in power distribution systems: management strategy and site selection of such a shunt active filter [1] by H. Akagi. In 1997, IEEE's Trans. Power. Deliv. [http://dx.doi.org/10.1109/61.568259] The focus of this study is on a parallel active filter that will be built by a utility company, with

Jack Sparrow Publishers © 2022, IJRDES, All Rights Reserved
www.jacksparrowpublishers.com

ISSN: 2582 - 4201(Online) , http://www.ijrdes.com/ , IJRDES, Vol. 4, Issue 5, 2022 , https://doi.org/10.63328/IJRDES-V4RI5P1

specific attention paid to the optimal placement of this filters on a feeder inside a power system network and the control technique that will be used to optimize its operation. Rather than attempting to reduce ac voltages throughout the feeder, the goal of the shunt apf is to damp harmonic transmission, which is caused by harmonic resonance between numerous capacitors for power quality improvement and lines inductors in the feeder. Suppressing the spread of harmonics is a "side effect" (or "feature") of the series active power filter that is often appreciated.

This study indicates that the optimal location is not the starting terminal but the end termination of the main line in the feeder, and that the series active power filter based on voltage sensing at the time of installation provides the most stability.

In order to ensure the safety and reliability of the shunt active filter, which is often installed on a feeder of a distribution grid in a residential area, a computer simulation is done using an analog circuit simulator. Using neural network technology for active power filter control: [2] P. S. Vazquez. IEE Proc.-Electr. Energy Appl. 54(1): 61-76. The use of neural networks is described for the regulation of an active power filter. Current and voltage harmonic are on the rise due to nonlinear loads in today's power networks. Harmonic distortion may be mitigated, and the power factor of the loaded equipment is improved with the help of active power filters (APFs). The suggested control architecture is a two-block neural network-based pulse width modulation (PWM) controller. It is the job of adaptive networks to make an educated guess about the standard compensation currents. On the other hand, a hysteresis band comparator based on a multilayer neural feedforward network (trained using a backpropagation technique) is used. Using Matlab-Simulink, we demonstrate two use cases for testing the effectiveness of the proposed control scheme.[3] An Integrated Artificial Neural Architecture for Power Systems. Abdeslam DO, Wira P, Flieller D. IEEE Transactions on Industrial Electronics 54(1):61-76. [http://dx.doi.org/10.1109/TIE.2006.888758]

3. Proposed System

A block schematic of the DSTATCOM's ANN controller is shown in Figure 1. The configuration of the system's components, including the DSTATCOM and the ANN controller, is shown in the image below. DC link capacitance (storage and energy), Voltage Source Inverter (VSI), and passive filter are the three main components of the DSTATCOM. SPWM technology regulates the VSI.

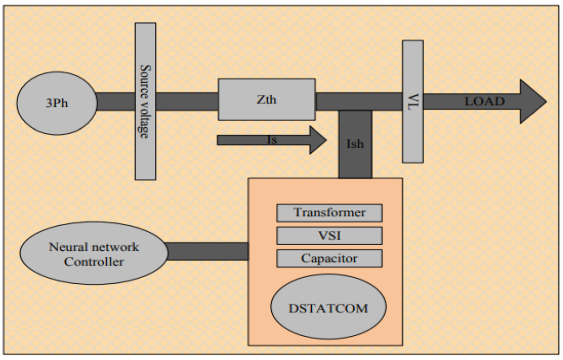

Fig:1 Diagram of the power model with DSTATCOM

When a voltage sag develops across Zth, the voltage drop may be corrected by injecting Ish. As can be shown in Eqs., the Ish value may be modulated by that of the VSC output (1-3). The amount of electricity that DSTATCOM adds to the electrical grid is given by Eq. (4).

$$I_{sh} = I_i - I_s \quad (1)$$

$$IL - I_s = IL - \left(\frac{(V_{th} - VL)}{Z_{th}}\right) \quad (2)$$

$$I_{sh} \angle \eta = IL \angle -\theta - \frac{(V_{th})}{Z_{th}}(\delta - \beta) + \frac{(V_{th})}{Z_{th}} \angle -\beta \quad (3)$$

$$S_{sh} = V_L I_{sh}{}^{*} \quad (4)$$

DSTATCOM makes adjustments to the power supply based on the Zth values or failure level of the connected load if there is an increase in fluctuation because of voltage dips. Whenever the Ish level is decreased, the after-correction voltage is attained without adding a power factor into the system.

The success of DSTATCOM's voltage-control efforts depends on how accurately Zth is predicted to change. By keeping the shunt-infused current Ish in unison with VL, the voltage output remedy may be achieved without adding any active power to the system, provided that the estimate of Ish is constrained. As shown in Fig. (1), a simple two-level VSC that is regulated by using NN to generate ordinary sinusoidal wave width modification (PWM) [16] is required for DSTATCOM connection.

3.1. NN Control Algorithm

The NN controller used in this study is a multilayer neural network, as illustrated in Fig.2.The PWM output is compared to a carrier signal using a comparator and then used as an input.

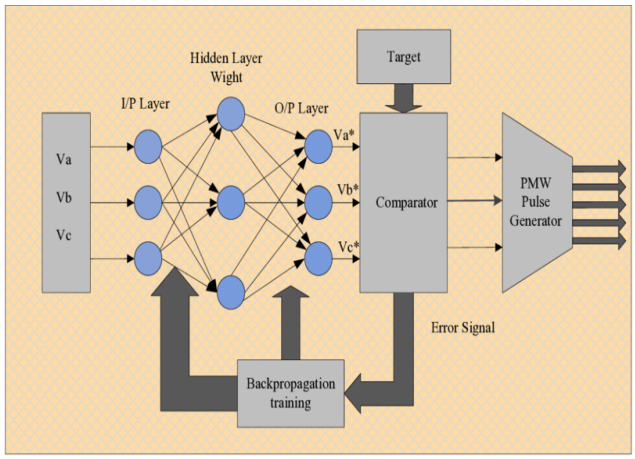

Fig:2 Single Line Diagaram Of The Neural Network Controller

Figure 3 shows the Neuron in the Matrix from Each Layer. Any inaccuracies in the filtering process will be corrected by feeding the output back into the system. It is essential in feedforward design to ensure both the tracking speed and the peace and stability (or boundedness) of all variables.

Instability & and unboundedness of impulses are only two of the major issues that may arise from not doing so, leading to the complete breakdown or destruction of the closed-loop system.

Jack Sparrow Publishers © 2022, IJRDES, All Rights Reserved
www.jacksparrowpublishers.com

ISSN: 2582 - 4201(Online) , http://www.ijrdes.com/ , IJRDES, Vol. 4, Issue 5, 2022 , https://doi.org/10.63328/IJRDES-V4RI5P1

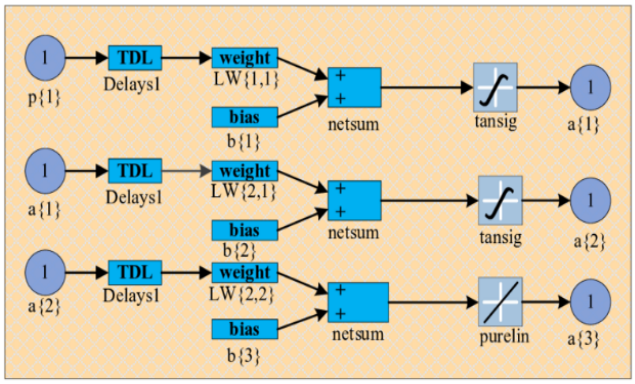

Fig: 3 Neuron in Matrix from Each Layer

The weights (Wij) of this NN shift depending on the underlying biases (Bj). The NN output is trained using a mean squared error of 0.0001, which can be calculated using Eq (5).

$$I = \sum_{i=1}^{N} e(i)^2 \quad (5)$$

$$n = w1,1p1 + w1,2p2 + \cdots + w1,RpR \quad (6)$$

$$n = Wp + b \quad (7)$$

$$a = f(Wp + b) \quad (8)$$

Overall, it is inadequate to use a single neuron fed by several inputs. The parallel operation sometimes requires and over 10 neurons (a layer) (3). As seen in Fig. 4, the connection between neurons may be shown to have several levels.

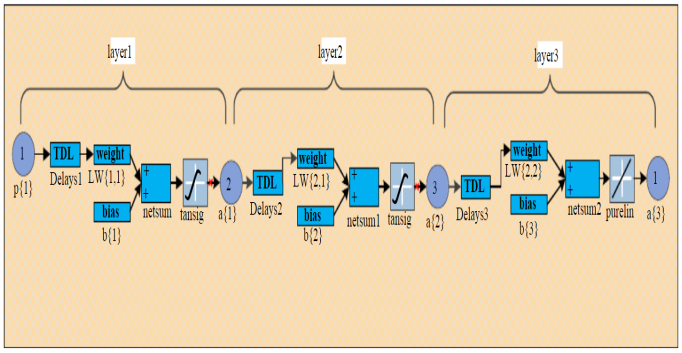

Fig: 4 Three Layer Neural Network

4. Simulation Results

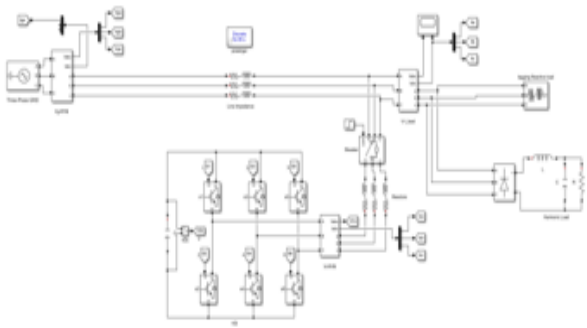

Fig.5.MATLAB/SIMULINK circuit diagram of the proposed system

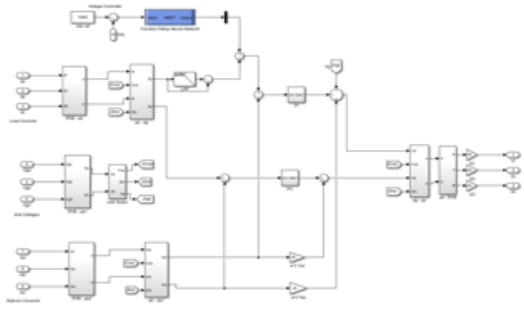

Fig.6.Control system

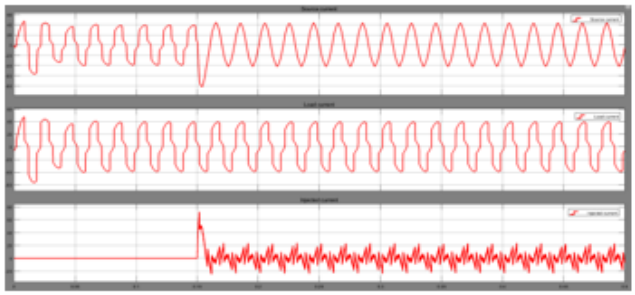

Fig.7 (a) Source current (b) Load current (c) Injected current

The DSTATCOM is simulated first by using Hysteresis current controller for current injection. The load current waveform is shown in Fig7 and its corresponding THD is shown in Fig10 which shows that THD is 3.36%. Fig9 shows the waveform of the reference current.

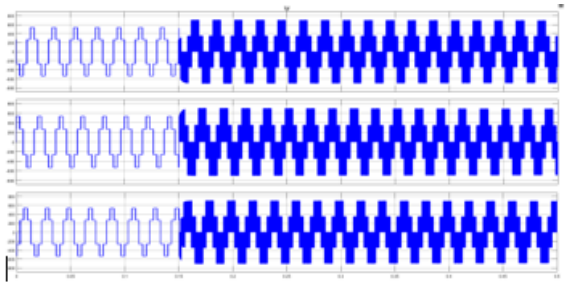

Fig.8 Inverter voltage

The waveforms of unbalanced load current are shown in Fig. 8. The DSTATCOM has to inject an unbalanced compensating current as shown in Fig. 8 to maintain the absorbed PCC current to be balanced and sinusoidal the PCC voltage during the excursion of heavy inductive load as shown the voltage is sinusoidal due to the compensation of DSTATCOM.

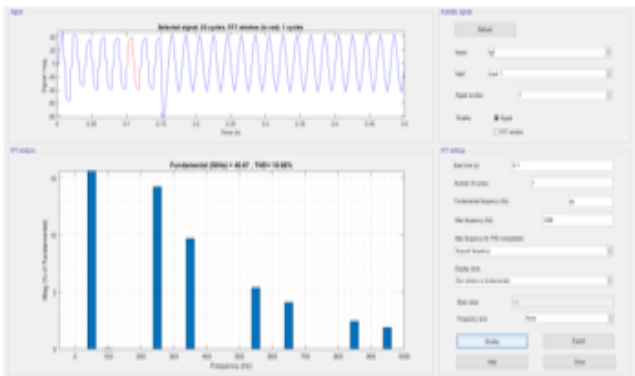

Fig.9 Source current THD%(18.88%) before compensation

Jack Sparrow Publishers © 2022, IJRDES, All Rights Reserved
www.jacksparrowpublishers.com

ISSN: 2582 - 4201(Online) , http://www.ijrdes.com/ , IJRDES, Vol. 4, Issue 5, 2022 , https://doi.org/10.63328/IJRDES-V4RI5P1

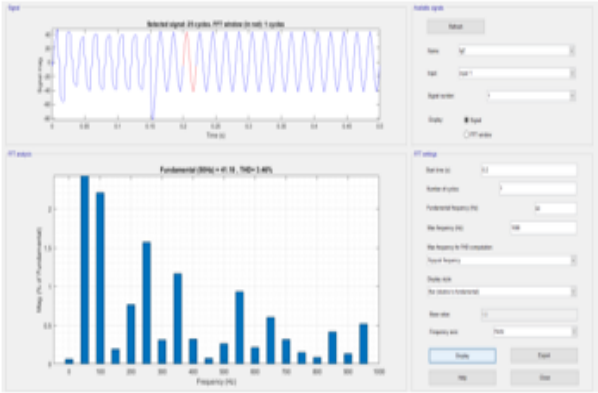

Fig.10 Source current THD%(3.46%)after compensation

As shown in Figure 9 and Figure 10, the THD of both the source voltage and load voltage is reduced to 18.88%, which is identical to the THD of the source voltage. THD level for supply current is observed to be 3.46% as shown in Figure 10. The proposed DSTATCOM can compensate for the harmonics present in the load current. The THD level of the load current is almost constant. The voltage waveform of the nonlinear load is improved and its THD of the nonlinear load voltage is reduced to 3.46% as shown in Figure 10. The THD of nonlinear load currents is increased to 18.88% and is presented in Figure 9. An increase in the THD of nonlinear load currents illustrates that the proposed DSTATCOM can compensate for the harmonics present in the source bus.

5. Conclusion

It is possible for a consumer to have harmonic issues as a result of voltage distortion. In this work, we present a DSTATCOM controller that is based on a multilayer neural network that operates in discrete time. By filtering the error of the complete closed-loop system, the network weights were adaptively changed in real-time. The static compensator in the distribution system provided the more common series shunt correction. With the goal of lowering harmonics, a distribution control system model was developed. As a component of the power infrastructure, the control quality study was developed and carried out in Simulink.

The results of this study studied the impacts of voltage sag and the mechanisms that exert influence on the waveforms of the field voltage and current. The goal of the DSTATCOM test is to improve voltage stability in distribution systems having nonlinear loads by eliminating noise at the generator. The installation of power system network-compatible equipment has helped alleviate the issue of poor power quality.

References

[1]. Akagi H. Control Strategy and Site Selection of a Shunt Active Filter for Damping of Harmonic Propagation in Power Distribution Systems. IEEE Trans Power Deliv 1997; 12(1): 354-63. [http://dx.doi.org/10.1109/61.568259]

[2]. R. S. and D. K. Singh. Simulation of D-STATCOM for Voltage Fluctuation 2012 Second IntConfAdvComputCommun Technol. 226-31.

[3]. P. S. Vazquez. Active power filter control using neural network technologies IEE Proceedings-Electric Power Appl. 54(1): 61-76.

[4]. Abdeslam DO, Wira P, Flieller D. A Unified Artificial Neural Network Architecture for Active Power Filters. IEEE Trans Ind Electron •••; 54(1): 61-76. [http://dx.doi.org/10.1109/TIE.2006.888758]

[5]. Lai L. Intelligent System Applications in Power Engineering: Evolutionary Programming and Neural Networks. 1998.

[6]. IEEE Recommended Practice for Evaluating Electric Power System Compatibility With Electronic Process Equipment. IeeeXplore 1998.

[7]. Salman GA, Hussein HI, Hasan MS. Enhancement The Dynamic Stability of The Iraq ' s Power Station Using PID Controller Optimized by FA and PSO Based on Different Objective Functions. ElektrotehVestn 2018; 85(2): 42-8.

[8]. H.W.Dugan RC, McGranaghan M F, Santoso S. Electrical Power Systems Quality , Second Edition. In: mcgraw-Hill. 2004.

[9]. Hong AY, Chen YY. Placement of power quality monitors using enhanced genetic algorithm and wavelet transform. IET GenerTransmDistrib 2011; 5(4): 461-6. [http://dx.doi.org/10.1049/iet-gtd.2010.0397]

[10]. [Guo W, Liu F, Si J, He D, Harley R, Mei S. Online Supplementary ADP Learning Controller Design and Application to Power System Frequency Control With Large-Scale Wind Energy Integration. IEEE Trans Neural Netw Learn Syst 2016; 27(8): 1748-61.

[11]. N.Veeraiah,BT.KrishnaIntrusion detection based on piecewise fuzzy C-means clustering and fuzzy Naïve Bayes rule. Multimedia Research. 2018 Oct;1(1):27-32.

[12]. U. Srilakshmi, N. Veeraiah, Y. Alotaibi, S. A. Alghamdi, O. I. Khalaf and B. V. Subbayamma, "An Improved Hybrid Secure Multipath Routing Protocol for MANET," in IEEE Access, vol. 9, pp. 163043-163053, 2021, doi: 10.1109/ACCESS.2021.3133882.

[13]. N. Veeraiah et al., "Trust Aware Secure Energy Efficient Hybrid Protocol for MANET," in IEEE Access, vol. 9, pp. 120996-121005, 2021, doi: 10.1109/ACCESS.2021.3108807.

[14]. eeraiah, N., Krishna, B.T. Trust-aware FuzzyClus-Fuzzy NB: intrusion detection scheme based on fuzzy clustering and Bayesian rule. Wireless Netw 25, 4021–4035 (2019).

[15]. Veeraiah, N., Krishna, B.T. An approach for optimal-secure multi-path routing and intrusion detection in MANET. Evol. Intel. 15, 1313–1327 (2022).

[16]. N. Veeraiah and B. T. Krishna, "Selfish node detection IDSM based approach using individual master cluster node," 2018 2nd International Conference on Inventive Systems and Control (ICISC), 2018, pp. 427-431, doi: 10.1109/ICISC.2018.8399109.

[17]. U. Srilakshmi, S. A. Alghamdi, V. A. Vuyyuru, N. Veeraiah and Y. Alotaibi, "A Secure Optimization Routing Algorithm for Mobile Ad Hoc Networks," in IEEE Access, vol. 10, pp. 14260-14269, 2022, doi: 10.1109/ACCESS.2022.3144679.

[18]. K. Pradeep and N. Veeraiah, "VLSI Implemetation of Euler Number Computation and Stereo Vision Concept for CORDIC based Image Registration," 2021 10th IEEE International Conference on Communication Systems and Network Technologies (CSNT), 2021, pp. 269-272, doi: 10.1109/CSNT51715.2021.9509639.

[19]. P. Kollapudi, S. Alghamdi, N. Veeraiah, Y. Alotaibi, S. Thotakura et al., "A new method for scene classification from the remote sensing images," Computers, Materials & Continua, vol. 72, no. 1, pp. 1339–1355, 2022.

Jack Sparrow Publishers © 2022, IJRDES, All Rights Reserved
www.jacksparrowpublishers.com